NEW

2XP

Aluminum Gear Pump

Galtech

Xtreme

walvoil
FLUID POWER E|MOTION

A member of
INTERPUMP GROUP

2XP

Aluminum Gear Pump

Walvoil presents the new range of 2XP Pumps, with Aluminium body and Cast Iron flanges

These pumps are particularly suitable for all applications where traditional Aluminium pumps are used at the limit of their performance; eg. for installation on mobile equipment intended for heavy duty operating cycles, where pressures or mechanical stresses are typically higher.

Its new modular construction ensures an increased versatility maintaining the same configurations of 2SP Series allowing new options.

- ☐ **High efficiencies**
- ☐ **Reduced number of components**
- ☐ **Reduced overall dimension**
- ☐ **Increased transmissible torque**

NOTE: for motor configuration, please contact Sales Department.

GENERAL WORKING CONDITIONS		
Displacement		from 4.1 to 31.5 cm³/rev *from 0.25 to 1.92 in³/rev*
Max continuous pressure	up to	250 bar - *3600 psi*
Fluid		hydraulic mineral oil-based
Fluid temperature range	with NBR (buna N) seals	from -20 to +80 °C *from -4 to +176 °F*
	with FPM (viton) seals	from -15 to +100 °C *from +5 to +212 °F*
Viscosity	Recommended	from 15 to 92 mm²/s (cSt)
	Permitted for starting	2000 mm²/s (cSt)
Max level of contamination	Recommended for operating pressure > 150 bar *(2150 psi)*	20/18/15 ISO 4406 *class 9 (NAS 1638)*
	Recommended for operating pressure < 150 bar *(2150 psi)*	21/18/15 ISO 4406 *class 10 (NAS 1638)*

Technical data

GROUP 2XP	Displacement		Max continuous pressure		Max intermittent pressure		Max peak pressure		Max rotation speed
	cm³/rev	*in³/rev*	bar	*psi*	bar	*psi*	bar	*psi*	rpm
2XP 040	4.1	*0.25*	250	*3600*	270	*3900*	290	*4200*	4000
2XP 060	6.1	*0.37*	250	*3600*	270	*3900*	290	*4200*	4000
2XP 080	8.7	*0.53*	250	*3600*	270	*3900*	290	*4200*	3500
2XP 110	11.2	*0.68*	250	*3600*	270	*3900*	290	*4200*	3500
2XP 140	14.2	*0.86*	250	*3600*	270	*3900*	290	*4200*	3500
2XP 160	16.8	*1.02*	230	*3350*	240	*3500*	250	*3600*	3500
2XP 190	19.8	*1.20*	210	*3050*	220	*3200*	230	*3350*	3500
2XP 220	22.9	*1.39*	190	*2750*	200	*2900*	210	*3050*	3000
2XP 260	26.4	*1.61*	170	*2450*	180	*2600*	190	*2750*	3000
2XP 290	29.1	*1.77*	150	*2150*	160	*2300*	170	*2450*	2500
2XP 310	31.5	*1.92*	130	*1850*	140	*2000*	150	*2150*	2500

NEW

Dimensions

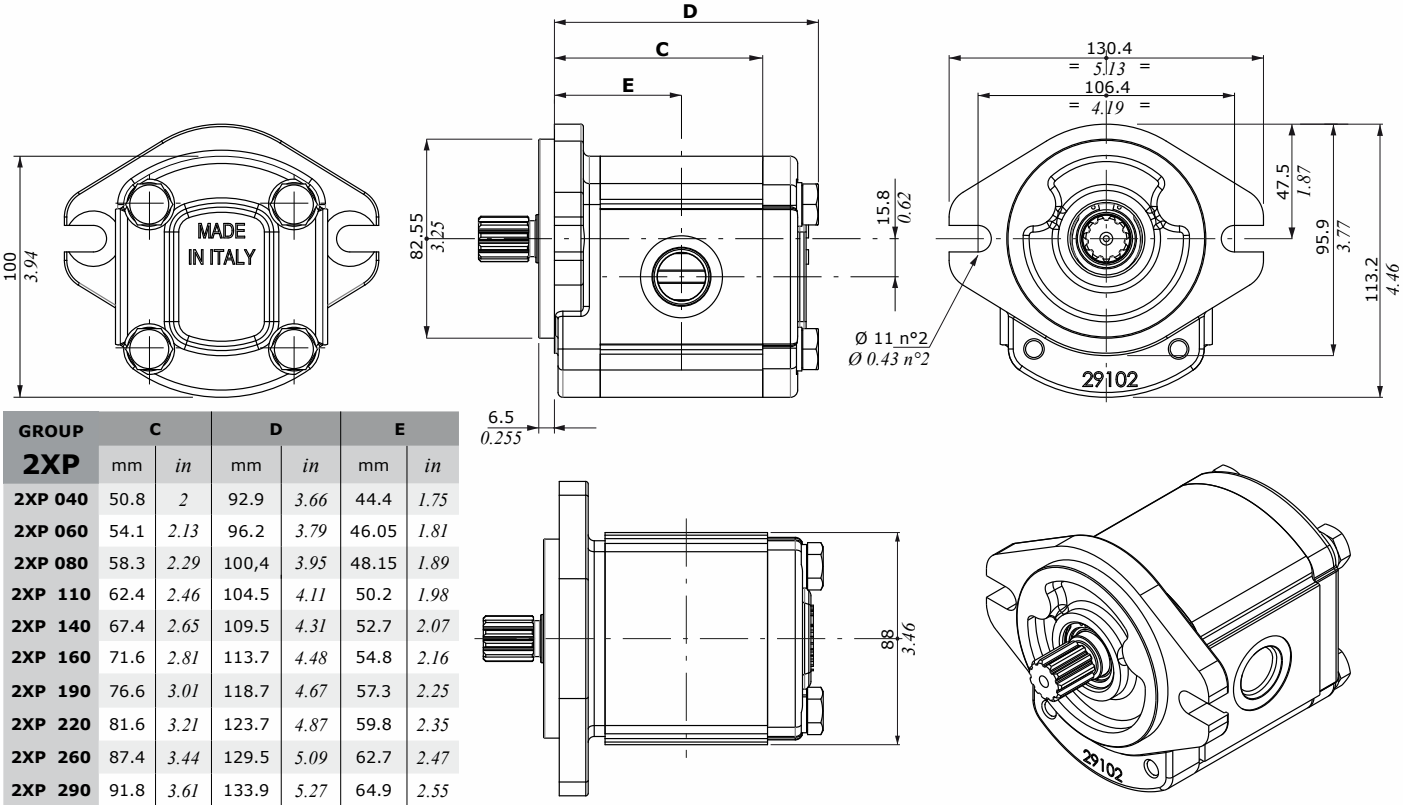

GROUP 2XP	C		D		E	
	mm	in	mm	in	mm	in
2XP 040	50.8	2	92.9	3.66	44.4	1.75
2XP 060	54.1	2.13	96.2	3.79	46.05	1.81
2XP 080	58.3	2.29	100,4	3.95	48.15	1.89
2XP 110	62.4	2.46	104.5	4.11	50.2	1.98
2XP 140	67.4	2.65	109.5	4.31	52.7	2.07
2XP 160	71.6	2.81	113.7	4.48	54.8	2.16
2XP 190	76.6	3.01	118.7	4.67	57.3	2.25
2XP 220	81.6	3.21	123.7	4.87	59.8	2.35
2XP 260	87.4	3.44	129.5	5.09	62.7	2.47
2XP 290	91.8	3.61	133.9	5.27	64.9	2.55
2XP 310	95.8	3.77	137.9	5.43	66.9	2.63

The dimensional drawing represents the version with **SAEA** flange (for other flanges, see the next page).

Cover with ports for rear connection

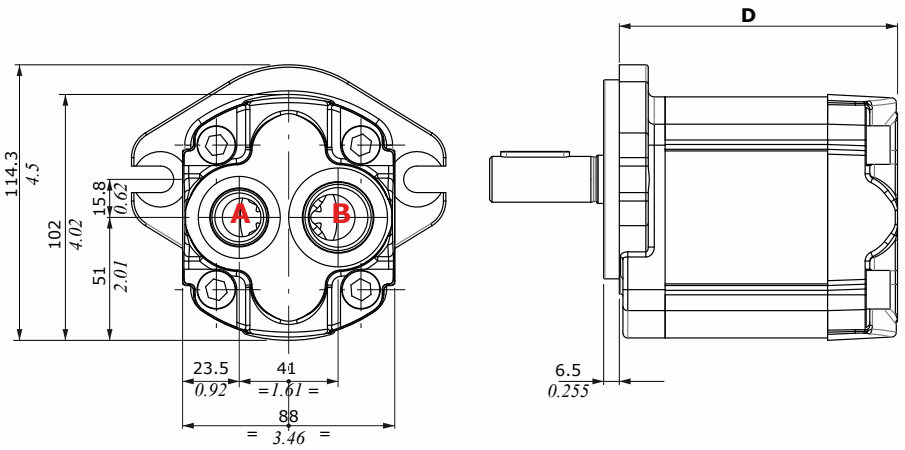

GROUP 2XP	D	
	mm	in
2XP 040	98.8	3.89
2XP 060	102.1	4.02
2XP 080	106.3	4.18
2XP 110	110.4	4.34
2XP 140	115.4	4.54
2XP 160	119.6	4.70
2XP 190	124.6	4.90
2XP 220	129.6	5.10
2XP 260	135.4	5.33
2XP 290	139.8	5.50
2XP 310	143.8	5.66

NOTE: the ports can be present both or individually, of the same or different sizes

2XP

Aluminum Gear Pump

Dimensions

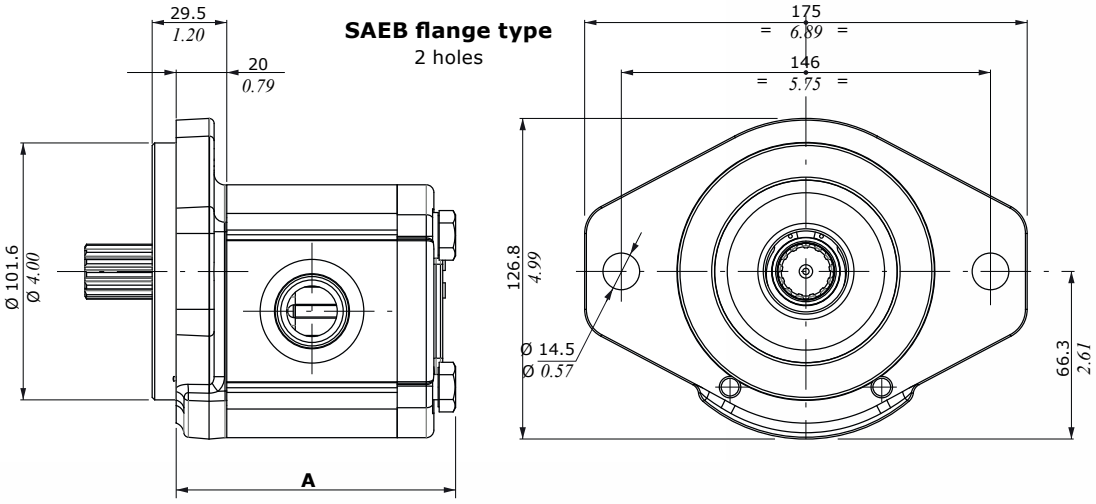

GROUP 2XP	A mm	A in
2XP 040	93.9	3.70
2XP 060	97.2	3.82
2XP 080	101.4	3.99
2XP 110	105.5	4.15
2XP 140	110.5	4.35
2XP 160	114.7	4.51
2XP 190	119.7	4.71
2XP 220	124.7	4.91
2XP 260	130.5	5.14
2XP 290	134.9	5.31
2XP 310	138.9	5.47

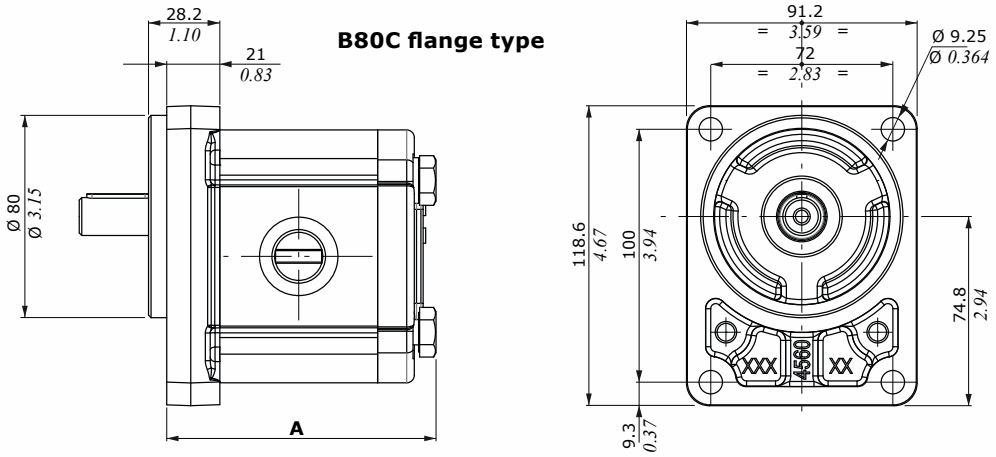

GROUP 2XP	A mm	A in
2XP 040	94.9	3.74
2XP 060	98.2	3.87
2XP 080	102.4	4.03
2XP 110	106.5	4.19
2XP 140	111.5	4.39
2XP 160	115.7	4.55
2XP 190	120.7	7.75
2XP 220	125.7	4.95
2XP 260	131.5	5.18
2XP 290	135.9	5.35
2XP 310	139.9	5.50

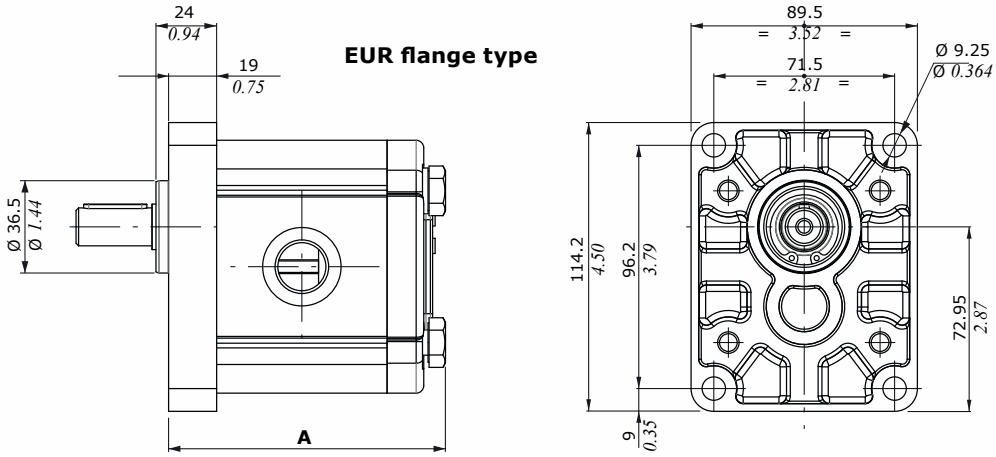

GROUP 2XP	A mm	A in
2XP 040	92.9	3.66
2XP 060	96.2	3.79
2XP 080	100.4	3.95
2XP 110	104.5	4.11
2XP 140	109.5	4.31
2XP 160	113.7	4.48
2XP 190	118.7	4.67
2XP 220	123.7	4.87
2XP 260	129.5	5.10
2XP 290	133.9	5.27
2XP 310	137.9	5.43

NEW

Configurations

Single pump:

2XP

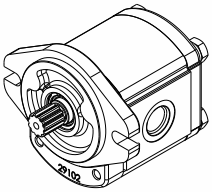

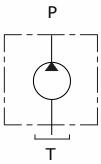

Double pump:

2XP + 1SP

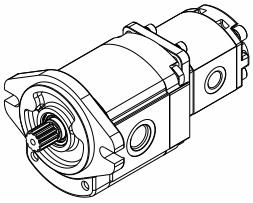

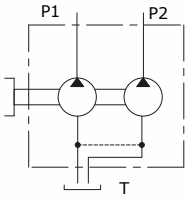

Double pump:

2XP + 2XP

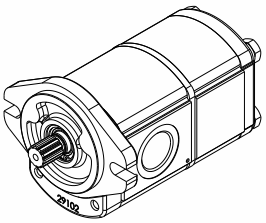

NOTE: for separate stage solutions please contact Sales Department

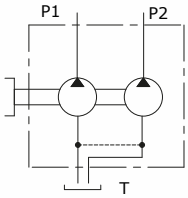

Single pump with back cover with auxiliary function:

2XP + AUX

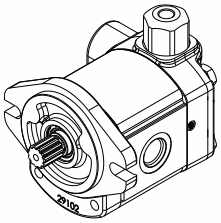

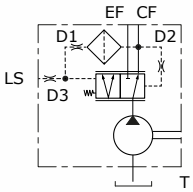

Connection position			
0	**1**	**3**	**4**
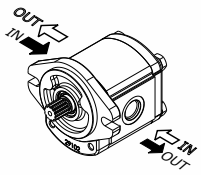	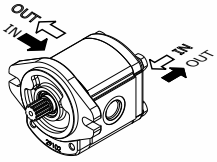	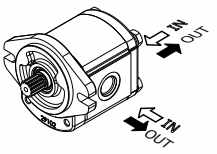	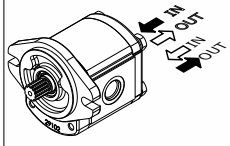

*Clockwise rotation - **D***

*Anti-clockwise rotation - **S***

Auxiliary valves available	
VLPI	Pressure relief valve (internal drain)
VLPE	Pressure relief valve (external drain)
VRF	Flow regulator
VRFVLPI	Flow divider and relief valve
UNLD	Unloading valve
CP (LS)	Priority valve

Portings and connections		porting type				
		G	U	T	N	F
connections options	0	●	●	●	●	●
	1	●	●	-	-	-
	3	●	●	-	-	-
	4	●	●	-	-	-

(-): for available connection, please contact our Sales Dpt.

2XP

Aluminum Gear Pump

Ports and connections

G: BSP

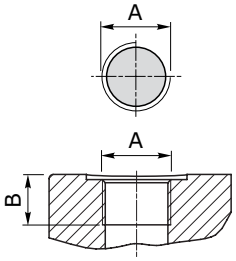

U: UN-UNF

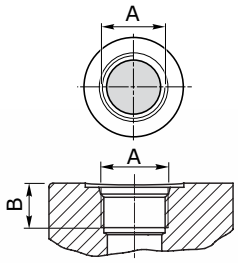

N: European flange

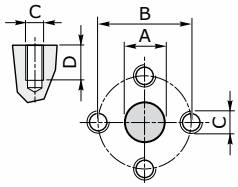

T: German flange

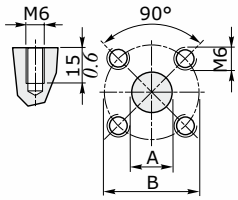

F: SAE J518-1 connection

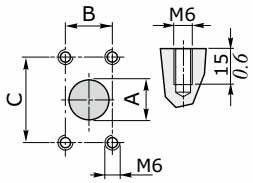

GROUP 2XP	Port Threading											
	G (BSP)						**U** (UN-UNF)					
	A		B				A		B			
	IN	OUT	IN		OUT		IN	OUT	IN		OUT	
			mm	*in*	mm	*in*			mm	*in*	mm	*in*
2XP 040	G 1/2"	G 1/2"	16	*0.63*	16	*0.63*	SAE10	SAE10	17	*0.67*	17	*0.67*
2XP 060	G 1/2"	G 1/2"	16	*0.63*	16	*0.63*	SAE10	SAE10	17	*0.67*	17	*0.67*
2XP 080	G 1/2"	G 1/2"	16	*0.63*	16	*0.63*	SAE10	SAE10	17	*0.67*	17	*0.67*
2XP 110	G 3/4"	G 1/2"	17	*0.67*	16	*0.63*	SAE12	SAE10	20	*0.79*	17	*0.67*
2XP 140	G 3/4"	G 1/2"	17	*0.67*	16	*0.63*	SAE12	SAE10	20	*0.79*	17	*0.67*
2XP 160	G 3/4"	G 1/2"	17	*0.67*	16	*0.63*	SAE12	SAE10	20	*0.79*	17	*0.67*
2XP 190	G 3/4"	G 1/2"	17	*0.67*	16	*0.63*	SAE12	SAE10	20	*0.79*	17	*0.67*
2XP 220	G 3/4"	G 1/2"	17	*0.67*	16	*0.63*	SAE16	SAE10	20	*0.79*	17	*0.67*
2XP 260	G 3/4"	G 1/2"	17	*0.67*	16	*0.63*	SAE16	SAE10	20	*0.79*	17	*0.67*
2XP 290	G 3/4"	G 1/2"	17	*0.67*	16	*0.63*	SAE16	SAE10	20	*0.79*	17	*0.67*
2XP 310	G 3/4"	G 1/2"	17	*0.67*	16	*0.63*	SAE16	SAE10	20	*0.79*	17	*0.67*

GROUP 2XP	Port Threading																							
	N (EUROPEAN)																**T** (GERMAN)							
	A				B				C		D				A				B					
	Ø IN		Ø OUT		Ø IN		Ø OUT		Ø IN	Ø OUT	IN		OUT		Ø IN		Ø OUT		Ø IN		Ø OUT			
	mm	*in*	mm	*in*	mm	*in*	mm	*in*			mm	*in*	mm	*in*	mm	*in*	mm	*in*	mm	*in*	mm	*in*		
2XP 040	13	*0.51*	13	*0.51*	30	*1.18*	30	*1.18*	M6	M6	15	*0.59*	15	*0.59*	20	*0.79*	15	*0.59*	40	*1.57*	35	*1.38*		
2XP 060	13	*0.51*	13	*0.51*	30	*1.18*	30	*1.18*	M6	M6	15	*0.59*	15	*0.59*	20	*0.79*	15	*0.59*	40	*1.57*	35	*1.38*		
2XP 080	13	*0.51*	13	*0.51*	30	*1.18*	30	*1.18*	M6	M6	15	*0.59*	15	*0.59*	20	*0.79*	15	*0.59*	40	*1.57*	35	*1.38*		
2XP 110	19	*0.75*	13	*0.51*	40	*1.57*	30	*1.18*	M8	M6	14	*0.55*	15	*0.59*	20	*0.79*	15	*0.59*	40	*1.57*	35	*1.38*		
2XP 140	19	*0.75*	13	*0.51*	40	*1.57*	30	*1.18*	M8	M6	14	*0.55*	15	*0.59*	20	*0.79*	15	*0.59*	40	*1.57*	35	*1.38*		
2XP 160	19	*0.75*	13	*0.51*	40	*1.57*	30	*1.18*	M8	M6	14	*0.55*	15	*0.59*	20	*0.79*	15	*0.59*	40	*1.57*	35	*1.38*		
2XP 190	19	*0.75*	13	*0.51*	40	*1.57*	30	*1.18*	M8	M6	14	*0.55*	15	*0.59*	20	*0.79*	15	*0.59*	40	*1.57*	35	*1.38*		
2XP 220	19	*0.75*	13	*0.51*	40	*1.57*	30	*1.18*	M8	M6	14	*0.55*	15	*0.59*	20	*0.79*	15	*0.59*	40	*1.57*	35	*1.38*		
2XP 260	19	*0.75*	13	*0.51*	40	*1.57*	30	*1.18*	M8	M6	14	*0.55*	15	*0.59*	20	*0.79*	15	*0.59*	40	*1.57*	35	*1.38*		
2XP 290	19	*0.75*	13	*0.51*	40	*1.57*	30	*1.18*	M8	M6	14	*0.55*	15	*0.59*	20	*0.79*	15	*0.59*	40	*1.57*	35	*1.38*		
2XP 310	19	*0.75*	13	*0.51*	40	*1.57*	30	*1.18*	M8	M6	14	*0.55*	15	*0.59*	20	*0.79*	15	*0.59*	40	*1.57*	35	*1.38*		

GROUP 2XP	Port Threading											
	F (SAE J518-1 connection)											
	A				B				C			
	Ø IN		Ø OUT		Ø IN		Ø OUT		Ø IN		Ø OUT	
	mm	*in*	mm	*in*	mm	*in*	mm	*in*	mm	*in*	mm	*in*
2XP 040	20	*0.79*	15	*0.59*	17.4	*0.69*	17.4	*0.69*	38	*1.50*	38	*1.50*
2XP 060	20	*0.79*	15	*0.59*	17.4	*0.69*	17.4	*0.69*	38	*1.50*	38	*1.50*
2XP 080	20	*0.79*	15	*0.59*	17.4	*0.69*	17.4	*0.69*	38	*1.50*	38	*1.50*
2XP 110	20	*0.79*	15	*0.59*	17.4	*0.69*	17.4	*0.69*	38	*1.50*	38	*1.50*
2XP 140	26	*1.02*	15	*0.59*	22.4	*0.88*	17.4	*0.69*	47.6	*1.87*	38	*1.50*
2XP 160	26	*1.02*	15	*0.59*	22.4	*0.88*	17.4	*0.69*	47.6	*1.87*	38	*1.50*
2XP 190	26	*1.02*	15	*0.59*	22.4	*0.88*	17.4	*0.69*	47.6	*1.87*	38	*1.50*
2XP 220	26	*1.02*	15	*0.59*	22.4	*0.88*	17.4	*0.69*	47.6	*1.87*	38	*1.50*
2XP 260	26	*1.02*	15	*0.59*	22.4	*0.88*	17.4	*0.69*	47.6	*1.87*	38	*1.50*
2XP 290	26	*1.02*	15	*0.59*	22.4	*0.88*	17.4	*0.69*	47.6	*1.87*	38	*1.50*
2XP 310	26	*1.02*	15	*0.59*	22.4	*0.88*	17.4	*0.69*	47.6	*1.87*	38	*1.50*

Shaft types

10

Torque 140 Nm - *103 lbft*

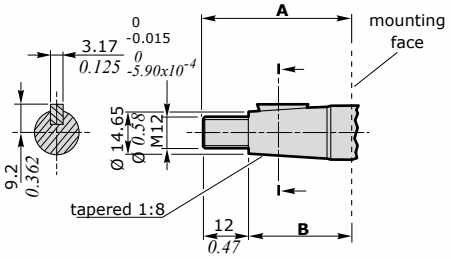

11

Torque 140 Nm - *103 lbft*

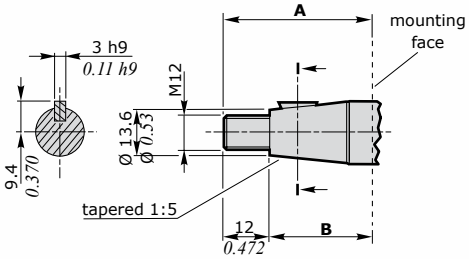

12

Torque 80 Nm - *59 lbft*

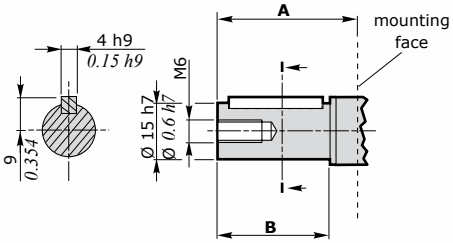

13

Torque 90 Nm - *66 lbft*

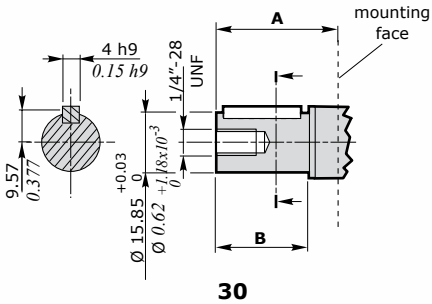

14

Torque 100 Nm - *74 lbft*

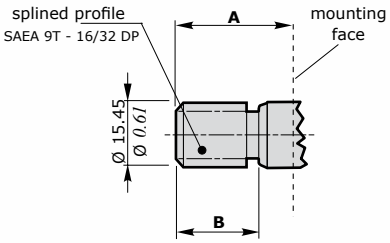

15

Torque 100 Nm - *74 lbft*

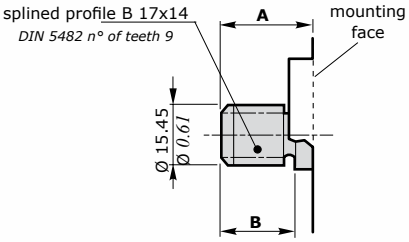

30

Torque 150 Nm - *110 lbft*

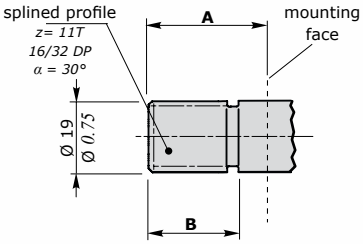

31

Torque 140 Nm - *103 lbft*

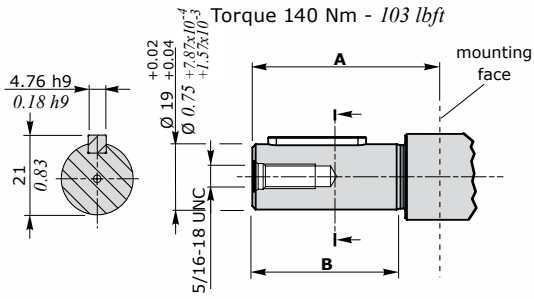

32

Torque 110 Nm - *81 lbft*

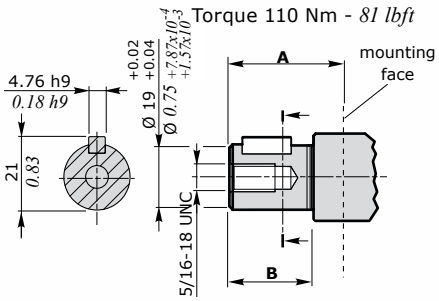

45*

Torque 280 Nm - *207 lbft*

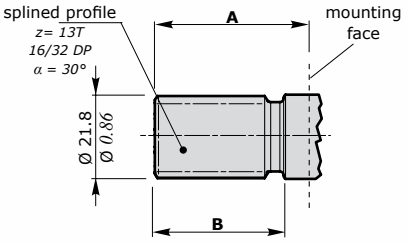

(*) Only for pump with **SAEB** flange

Type	Shaft dimensions											
	EUR - SAEA				SAEB				B80C			
	A		B		A		B		A		B	
	mm	*in*	mm	*in*	mm	*in*	mm	*in*	mm	*in*	mm	*in*
10	39.5	*1.56*	27.5	*1.08*	-	-	-	-	37.5	*1.48*	25.5	*1.00*
11	39.5	*1.56*	27.5	*1.08*	-	-	-	-	37.5	*1.48*	25.5	*1.00*
12	36.5	*1.44*	30	*1.18*	-	-	-	-	34.5	*1.36*	30	*1.18*
13	32	*1.26*	24	*0.94*	-	-	-	-	30	*1.18*	24	*0.94*
14	31.5	*1.24*	23	*0.91*	-	-	-	-	29.5	*1.16*	23	*0.91*
15	26	*1.02*	20	*0.79*	-	-	-	-	24	*0.94*	20	*0.79*
30	31.5	*1.24*	23.8	*0.94*	-	-	-	-	-	-	-	-
31	53.8	*2.12*	44.5	*1.75*	-	-	-	-	-	-	-	-
32	31	*1.22*	24	*0.94*	-	-	-	-	-	-	-	-
45*	-	-	-	-	41.2	*1.62*	34	*1.34*	-	-	-	-

Shaft - flange combination

GROUP 2XP		Shaft type									
		10 Tapered 1:8	**11** Tapered 1:5	**12** EUR parallel shaft	**13** SAEA parallel shaft	**14** SAEA 9T splined	**15** DIN5482 9T (26/24) splined	**30** SAE 11T splined	**31** SAE Ø19 (53.8 mm - *2.12 in*) parallel shaft	**32** SAE Ø19 (31 mm - *1.22 in*) parallel shaft	**45** SAEB 13T splined
SAEA	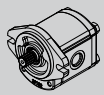	●	●	●	◇	◇	●	◇	◇	●	-
SAEB 2F	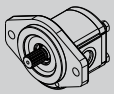	●	●	●	●	●	●	-	-	-	◇
B80C		●	◇	◇	●	●	◇	-	-	-	-
EUR		◇	●	◇	●	●	●	-	-	-	-

◇ = STANDARD COMBINATION
● = AVAILABLE COMBINATION

Description composition

2XP - G - 140 - D - EUR - B - N - 10 - 0 - G

Pump type

Flange and cover
G: cast iron material
A: aluminum material

Displacement*

Rotation direction
D: clockwise rotation
S: anticlockwise rotation

Flange type
SAEA
SAEB 2 holes (only cast iron)
B80C
EUR

O-ring seals shaft type
A: without O-ring seals
B: for pressure up to 3 bar - *43.5 psi*
H: for pressure up to 8 bar - *116 psi*
K: for pressure up to 30 bar - *435 psi*

O-ring seals
N: NBR
V: viton

Shaft type
10: tapered 1:8
11: tapered 1:5
12: EUR parallel shaft
13: SAEA parallel shaft
14: SAEA 9T splined
15: DIN5482 9T splined
30: SAE 11T splined
31: SAE Ø19 (53.8)*² parallel shaft
32: SAE Ø19 (31)*² parallel shaft
45: SAEB 13T splined

Connection position*¹
0 - 1 - 3 - 4

Connection type
G: BSP threading
U: UN-UNF threading
N: european flange
T: german flange
F: SAE J518-1 flange

(*) for displacement types, see "technical data" table
(*¹) for position tipes, see table on "configuration" page
(*²) (53.8 mm - *2.12 in*)
(31 mm - *1.22 in*)

2XP+2XP configuration example

2XP - G - 140 - D - EUR - B - N - 10 - 0 - G / TK / 2XP - A - 110 - 0 - G

TK compact tandem
Thickness: 6 mm - *0.24 in*
Max. torque 100 Nm - *74 lbft*

Cover
A: aluminum material

Displacement

Connection position

Connection type

D1WGCM05E - 1st edition April 2021

Walvoil S.P.A. • 42124 Reggio Emilia • Italy • Via Adige, 13/D • Tel.+39.0522.932411 • Fax +39.0522.300984
www.walvoil.com